FAB28RPB5

Refrigerator, 50's Style , One Door, Free standing, Hinge position: Right, Pastel blue, Fan assisted refrigerator, static freezer, D

TYPE

Product Family: Refrigerator • Installation: Free standing • Category: One Door • Cooling type: Fan assisted refrigerator, static freezer • Defrost: Automatic for refrigerator, manual for freezer • Hinge position: Right • Hinge type: Standard • EAN code: 8017709299279

AESTHETICS

Colour: Pastel blue • Finishing: Glossy • Aesthetics: 50's Style • Design: Rounded • Material: Heat-moulded • Handle type: Fixed • Handle: External • Handle colour: Chrome • Side material: Steel • Side colour: Pastel blue • Door shelves profile color: Chrome • Drawers profile color: Chrome • Color of glass shelf profile: Chrome

REFRIGERATOR COMPARTMENT FEATURES

No. of adjustable shelves: 1 • Number of fruit and vegetables drawers: 1 • Type of crisper/vegetable drawers cover: On sliding rails • Type of adjustable shelves: Glass • Crisper Cover: Yes • Type of crisper/vegetable drawers cover: Glass • Life Plus zone-0° C: Yes • Internal light in fridge: Yes • Type of internal light (fridge): LED

REFRIGERATOR INNER DOOR

No. of door shelves with transparent cover: 1 • Number of adjustable door shelves: 1 • Adjustable door shelves with wire support: Yes • No. of bottle shelves: 1 • Bottle shelves with wire support: Yes

OTHER REFRIGERATOR FEATURES

MultiFlow: Yes • Fan: Yes

FREEZER COMPARTMENT FEATURES

Internal freezer compartment: Yes

OTHER TECHNICAL FEATURES

Door open alarm: Acoustic and visual • Antibacterial Gasket: Yes • Type of temperature control: Electronic • No. of compressors: 1 • Type of compressor: Inverter

PERFORMANCE / ENERGY LABEL - REG. 2019

Annual energy consumption: 130 kWh/a • Energy efficiency class: D • Total net volume: 270 l • Sum of the volumes of the frozen compartment(s): 26 l • Sum of the volumes of the chill compartment(s) and the unfrozen compartment(s): 244 l • Airborne acoustical noise emission class: B • Temperature Rise Time: 9 h • 4 star - Freezing capacity: 2.6 Kg/24h • Climate class: SN, N, ST, T • EEI: 79 %

ELECTRICAL CONNECTION

Electrical connection rating: 90 W • Voltage (V): 220-240 V • Frequency (Hz): 50/60 Hz • Power supply cable length: 180 cm

LOGISTIC INFORMATION

Dimensions: 1530x601x728 mm • Width: 601 mm • Product width with maximum doors opening: 926 mm • Height: 1530 mm • Depth without handle: 728 mm • Product depth with handle: 768 mm • Product depth with doors open at 90°: 1197 mm • Net weight (kg): 73.500 kg

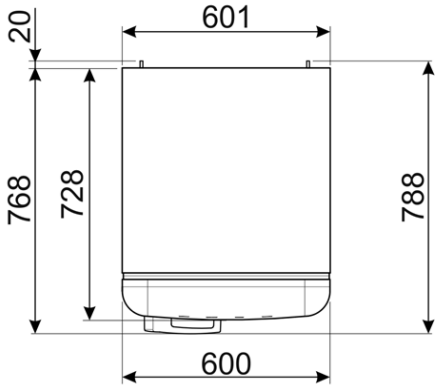
20
601
768
728
788
600

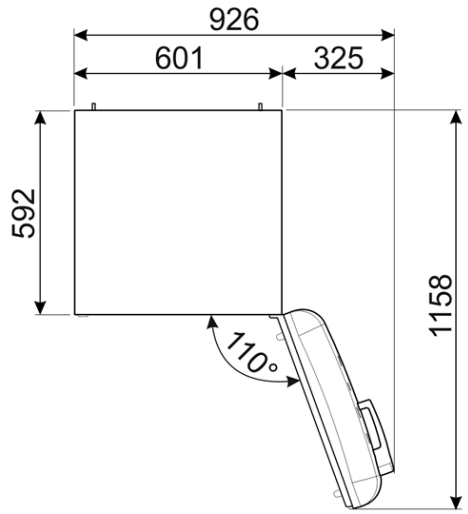
926
601
325
592
1158
110°

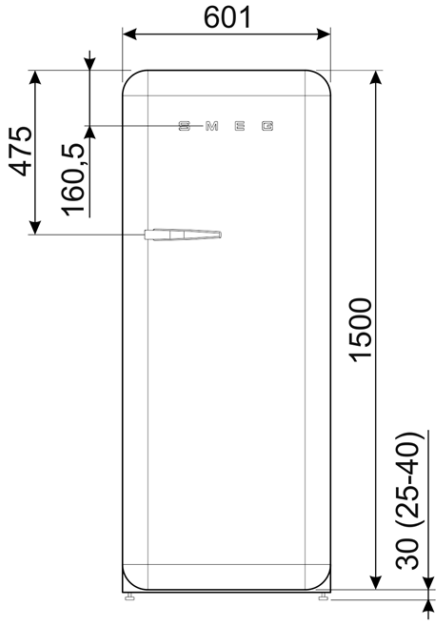
601
475
160,5
1500
30 (25-40)

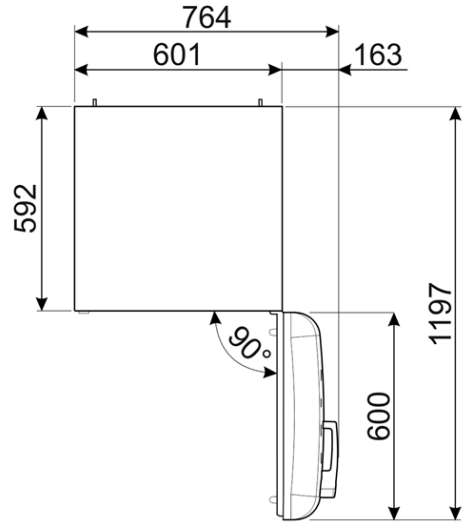
764
601
163
592
1197
90°
600