FAB50RPB5

Refrigerator, 50's Style , Double Door, Free standing, Hinge position: Right, Pastel blue, Total No Frost - Double Cooling system, E

TYPE

Product Family: Refrigerator • Installation: Free standing • Category: Double Door • Cooling type: Total No Frost - Double Cooling system • Defrost: Automatic • Hinge position: Right • Hinge type: Standard • EAN code: 8017709299415

AESTHETICS

Colour: Pastel blue • Finishing: Glossy • Aesthetics: 50's Style • Design: Rounded • Material: Heat-moulded • Handle type: Fixed • Handle: External • Handle colour: Chrome • Side material: Steel • Side colour: Pastel blue • Display: LED • Display porition: Interno (cella frigo) • Door shelves profile color: Silver • Drawers profile color: Silver • Color of glass shelf profile: Chrome

REFRIGERATOR COMPARTMENT FEATURES

No. of adjustable shelves: 2 • Number of fruit and vegetables drawers: 1 • Type of crisper/vegetable drawers cover: Standard • Type of adjustable shelves: Glass • Crisper Cover: Yes • Type of crisper/vegetable drawers cover: Glass • Life Plus zone-0°C: Yes • Internal light in fridge: Yes • Type of internal light (fridge): LED

REFRIGERATOR INNER DOOR

Number of adjustable door shelves: 3 • No. of bottle shelves: 1

OTHER REFRIGERATOR FEATURES

MultiFlow: Yes • Fan: Yes • Ionizer: Yes

FREEZER COMPARTMENT FEATURES

No. of shelves: 1 • Type of shelves: Glass • Internal light in freezer: Yes • Type of internal light (freezer): LED

FREEZER INNER DOOR

No. of adjustable door shelves: 2

OTHER FREEZER FEATURES

Manual ice maker: Yes • Ice maker: Manual • Fast freezing compartment: Yes

OTHER TECHNICAL FEATURES

Functions display: Fast freezing, ECO, Temperature alarm • Fast freezing button: Yes • Door open alarm: Acoustic and visual • Type of temperature control: Electronic • No. of compressors: 1 • Type of compressor: Inverter

PERFORMANCE / ENERGY LABEL NEW 2019

Annual energy consumption: 265 kWh/a • Energy efficiency class: E • Total net volume: 524 l • Sum of the volumes of the frozen compartment(s): 124 l • Sum of the volumes of the chill compartment(s) and the unfrozen compartment(s): 400 l • Airborne acoustical noise emission class: C • Temperature Rise Time: 15 h • 4 star - Freezing capacity: 8 Kg/24h • Climate class: SN, N, ST, T • EEI: 96 %

ELECTRICAL CONNECTION

Electrical connection rating: 197 W • Voltage (V): 220-240 V • Frequency (Hz): 50/60 Hz • Power supply cable length: 200 cm

LOGISTIC INFORMATION

Dimensions: 1921x796x805 mm • Width: 796 mm • Product width with maximum doors opening: 1185 mm • Height: 1921 mm • Depth without handle: 805 mm • Product depth with handle: 851 mm • Product depth with doors open at 90°: 1470 mm • Net weight (kg): 127.000 kg

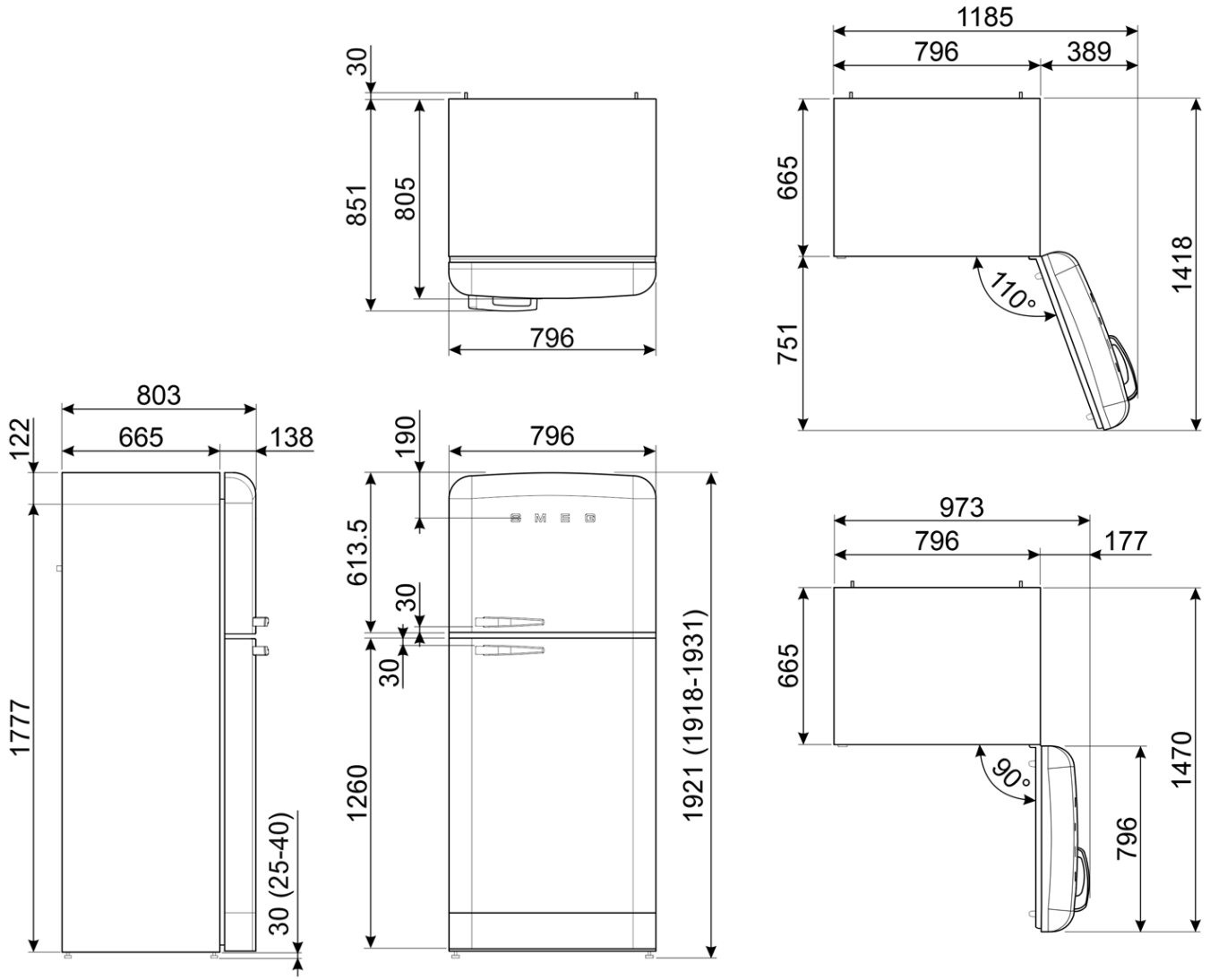
803
665
138
122
1777
30 (25-40)
30
851
805
796
190
613.5
30
30
1260
796
1921 (1918-1931)
1185
796
389
665
751
110°
1418
973
796
177
665
90°
796
1470